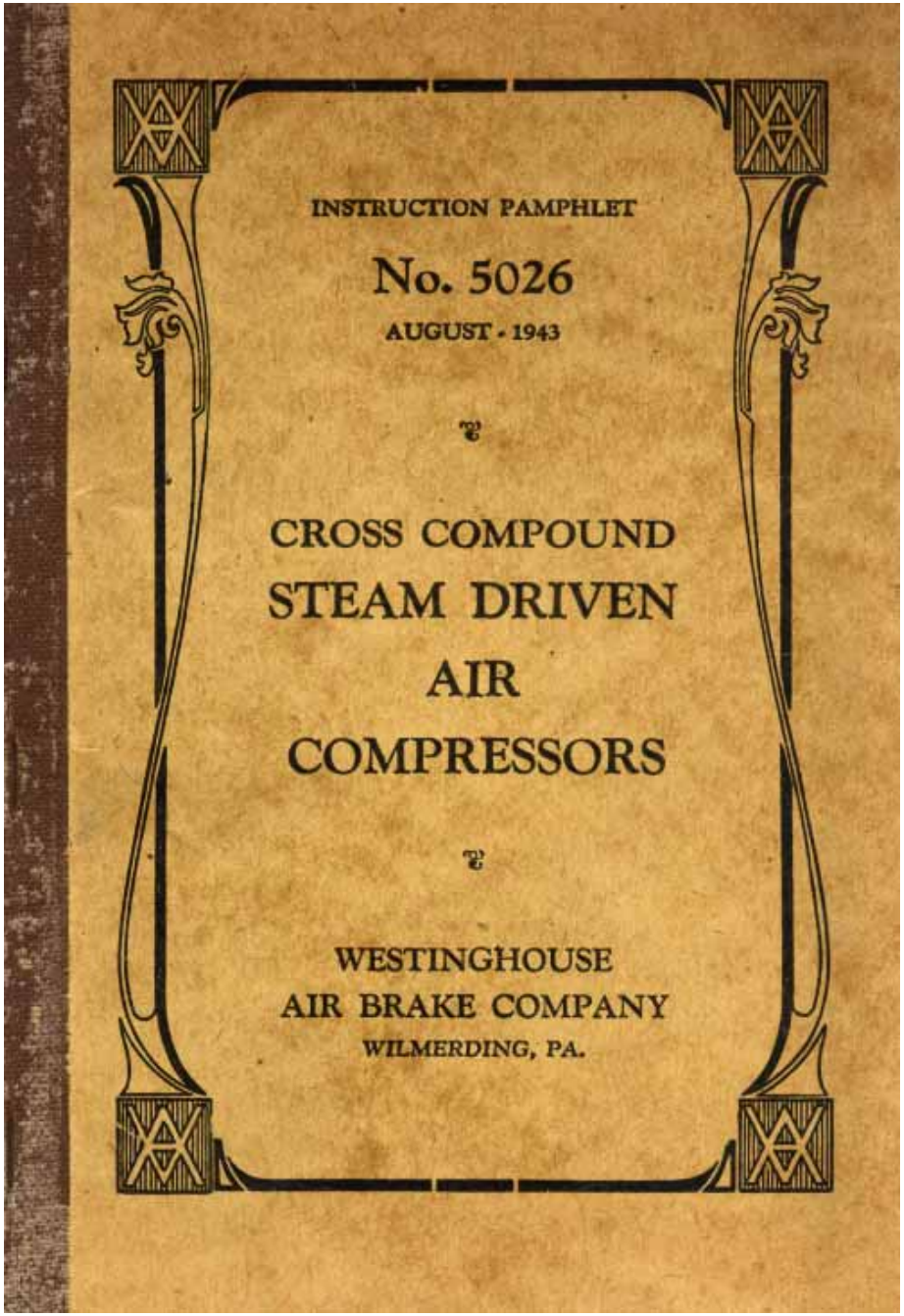

CROSS COMPOUND STEAM DRIVEN AIR COMPRESSORS

INSTRUCTION PAMPHLET

No. 5026

AUGUST - 1943

SUPERSEDING ISSUE OF FEBRUARY, 1942)

WESTINGHOUSE
AIR BRAKE COMPANY
WILMERDING, PA.

CONTENTS

TITLE	PAGE
Cross Compound Air Compressors	5
8½″ Cross Compound Air Compressor	7
Description	9
Old and New Standard Air Compressors	15
10½″ Cross Compound Air Compressor	17
Operation of Cross Compound Air Compressors	18
Type "G" Air Filter	25
No. 54 Air Strainer	26
General Data	30
Installation and Operating Instructions	33
Type "F-1-A" Lubricator	43
Repair Shop and Road Tests	55
Test of Steam End	59
Disorders	62
Maintenance	65
Cleaning the Type "G" Air Filter	70

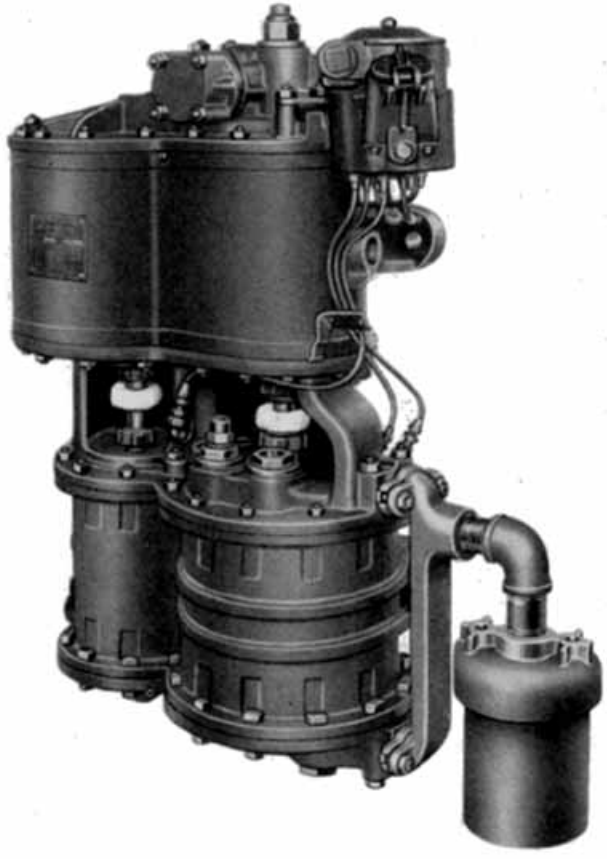

Fig. 1. Front View of the 8½" Cross Compound Air Compressor with "F-1-A" Lubricator, Type "A" Air Inlet Manifold and Type "G" Air Filter

Cross Compound Air Compressors

NOTE—The reference numbers shown herein are for convenience only and are not to be used when ordering repair parts. See Part Catalog giving piece numbers, etc.

It is generally recognized that the duty imposed upon the locomotive air compressor has very largely increased from year to year, but the extent of this increase is more fully appreciated when the following factors are considered:—

(a) The development of locomotives of great weight and tractive power and in consequence longer trains of heavy, large capacity cars.

(b) The large brake cylinders and reservoirs required for the heavier cars, the longer brake pipe due to the longer trains hauled, and the greater number of flexible connections and fittings where leakage may occur, combine to demand normally a larger volume of compressed air than ever before.

(c) The growing use of many *pneumatically* operated auxiliary appliances, such as water scoops, automatic ash pans, engine reversing appliances, Pullman water raising system, bell ringers, etc., which take their supply from the air compressor.

(d) The necessity of avoiding delays at terminals where traffic tends to congest, by a prompt charging of long trains. Present day service conditions demand a compressor of ample capacity to secure maximum brake efficiency.

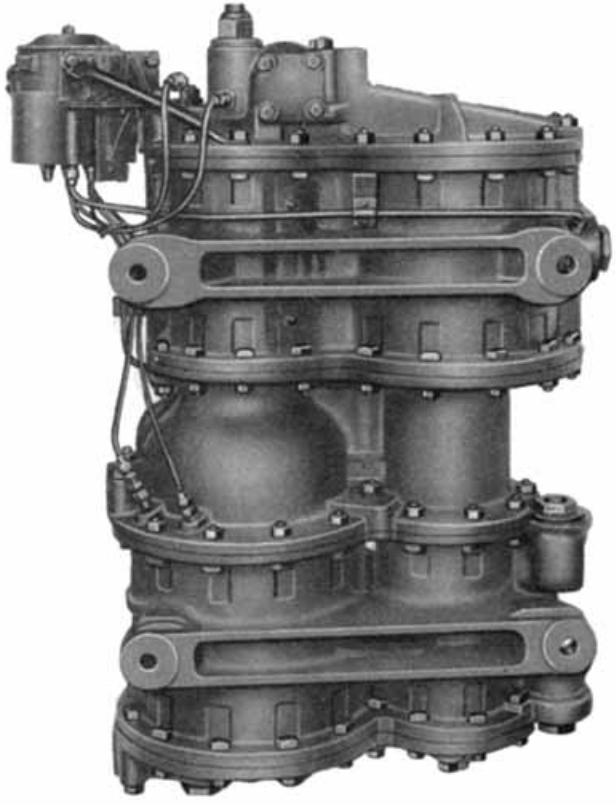

Fig. 2. Rear View of the 8½″ Cross Compound Air Compressor with "F-1-A" Lubricator

8½″

CROSS COMPOUND AIR COMPRESSORS

The Westinghouse 8½″ Cross Compound Compressor was developed for the specific purpose of combining maximum capacity and highest efficiency, by compounding both the steam supplied and the air compressed to the extent that, while this compressor has a capacity over three times greater than the well known 9½″ single stage compressor, the steam consumption per 100 cubic feet of air compressed is but one-third.

The 8½″ compressor is supplied in two sizes. The 8½″—150, ordinarily used in steam road service, has a normal displacement of 150 cubic feet when operating on 200 pounds steam pressure. The 8½″—120 was designed to operate on a lower steam pressure, and has a normal displacement of 120 cubic feet when operating on 160 pounds steam pressure.

While the cross compound air compressor was originally designed to operate on saturated steam at a maximum of 200 pounds pressure, the introduction of superheat steam and higher pressures was later responsible for modifications providing operation on steam pressures up to 275 pounds.

The present recommended standard 8½″—150-D air compressor is suitable for use with both saturated and superheat steam up to 300 pounds pressure.

A Special air compressor, known as the 8½″—150-S, is available for steam pressures up to 400 pounds pressure.

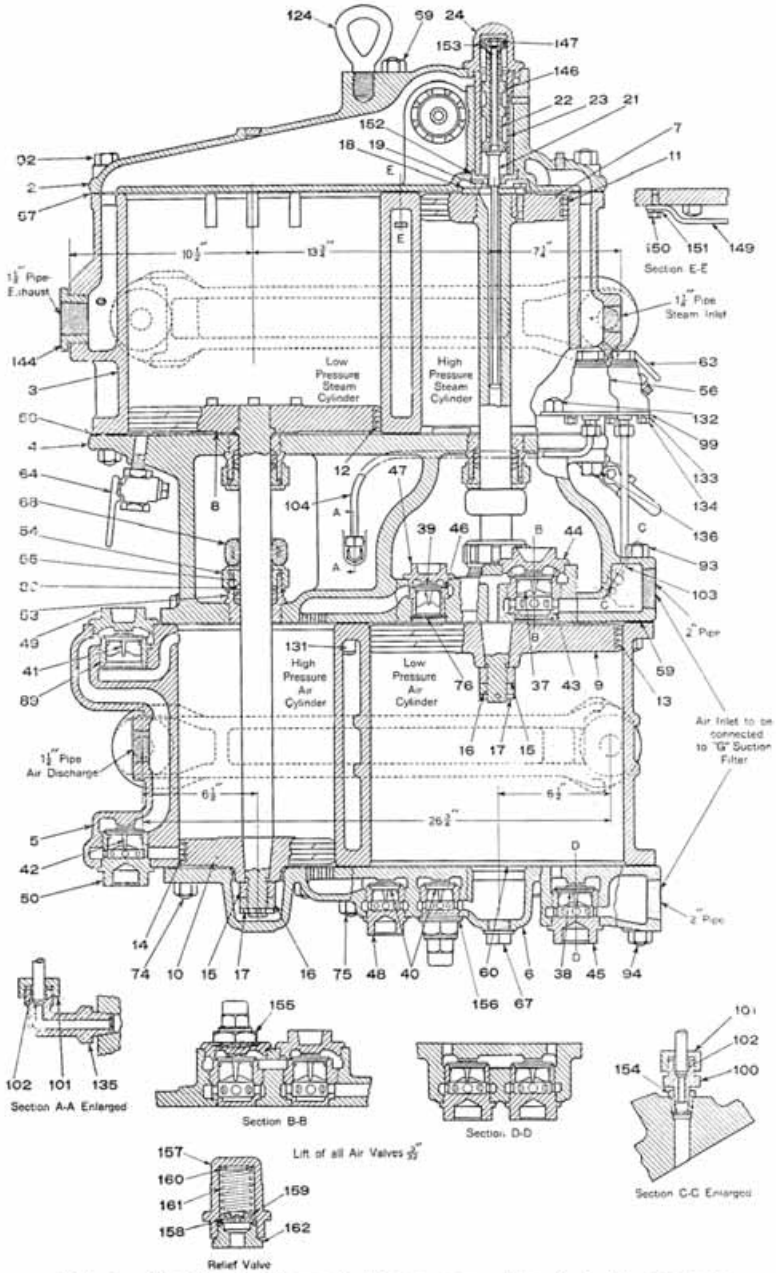

Fig. 3. Sectional View of Compressor Showing the Present Standard Piston Type Reversing Valve

Description

The steam cylinders are placed vertically above the air cylinders and connected by a common center piece, see exterior views, Figs. 1 and 2.

The sectional assembly view, Fig. 3, serves to illustrate the *simplicity* of this design and emphasize the fact that the cross compound compressor is a serial arrangement of two standard single stage compressors, actuated by the same controlling mechanism, and with pistons moving uniformly in opposite directions. This illustration also shows the few moving parts employed, which comprise (*a*), the high pressure steam and low pressure air pistons, connected by a Nickel-Chrome steel piston rod drilled for the reversing valve rod which operates the reversing valve, and which in turn actuates the main piston valve controlling the admission of steam to and the exhaust from both the high and low pressure steam cylinders; and (*b*), the low pressure steam and high pressure air pistons connected by a solid Nickel-Chrome steel piston rod having no mechanical connection with the valve gear.

The drain cock 63 is intended to draw off any condensation in the steam passage and should always be opened when the compressor is first started. The drain cocks 64, connected to both steam cylinders, are for the same purpose and should also be opened for a short time before the compressor is started so that any condensation of steam in the cylinder may be removed.

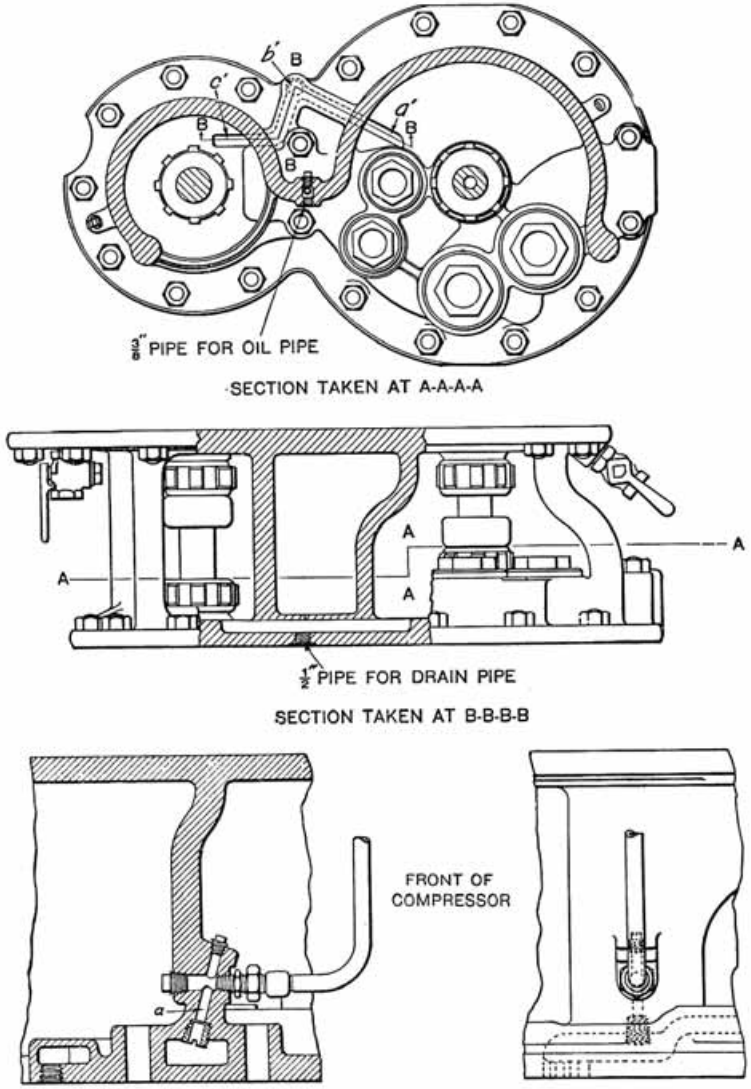

Fig. 4. Views of Center Piece, Showing Drainage and Location of Oil Hole for High Pressure Air Cylinder

Fig. 4 shows partial sectional views of the center piece of the compressor, illustrating the provision made for draining off from the center piece the water which drips from the stuffing boxes. The water which thus accumulates is drained through passages *a′* and *c′* to *b′* and thence through the drain pipe connection on the lower flange to some convenient point, as between the engine frame.

Fig. 4 also shows the present location of oil hole for the high pressure air cylinder. Whereas the oil hole was formerly located near the discharge passage from the high pressure cylinder, an oil hole is now located at a point where the oil will feed directly into the inlet passages to the high pressure air cylinder. The center piece is tapped for ⅜-inch pipe on both the front and back of the rear wall, thus permitting of attaching the oil pipe at either the front or the back. Our standard practice, however, is to connect the oil pipe at the front for the sake of accessibility, with the back opening plugged. Interchangeability is not affected in any way since the old connection is still retained.

The arrangement of holes, as illustrated, enables the oil passage in the center piece to be cleaned out merely by removing the plug at the top of the angular hole *a* and introducing into it a straight inflexible rod.

Plates 1 and 2, are diagrammatic views in which the piston valve and reversing valve are turned 90 degrees horizontally from their actual position in order to make the operation more easily understood, and all ports and passages are connected in the simplest possible manner, without regard to the actual construction of the compressor.

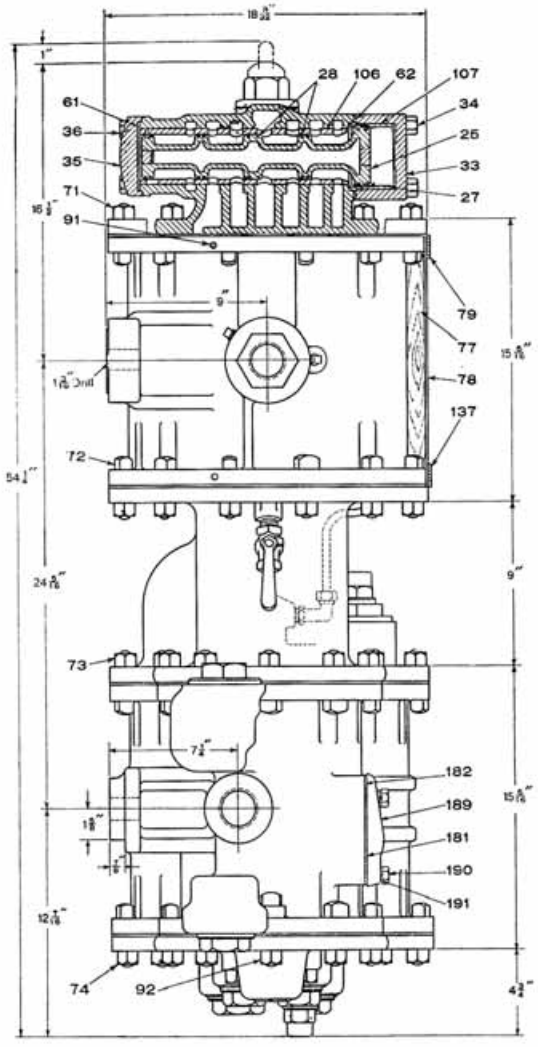

Fig. 5. Outline of Compressor with Sectional Assembly View of the Standard Design Main Valve and Housing

Referring to Plate 1, steam inlet passage *a*, communicating with cavity K and the two chambers A and A′, conveys the steam from the source of supply to the operating valves, of which there are two, namely: the reversing valve 22, and the piston valve 25. The piston valve is a multiple piston device, consisting of a large piston at one end, with four smaller intermediate pistons of uniform size, which will be referred to hereinafter as numbers 1, 2, 3, and 4, numbering from the small piston end of the piston valve.

It is evident, that with five pistons working in a cylinder, we have, including the ends, six separate chambers. In this particular construction, five of these chambers have permanent connections as follows:

The first chamber, E, behind the outer end of the first small piston, to the atmosphere.

The second chamber A, between the first and second pistons, to passage *a*.

The third chamber F, between the No. 2 and No. 3 intermediate pistons, to the lower end of the low pres sure steam cylinder (passage *f*).

The fourth chamber D, between the No. 3 and No. 4 intermediate pistons, to the upper end of the low pressure steam cylinder (passage *d*).

The fifth chamber A′ between the fourth intermediate and the inner side of large piston, to steam inlet passage *a*.

The reversing valve 22 moving vertically, controls the admission and exhaust of steam from cavity *N*, behind the outer end of the large piston of the piston valve, causing it to operate horizontally, the intermediate pistons moving as follows:

Intermediate piston No. 4 crosses a port connecting with passage *c*, controlling the flow of steam to the upper end of the high pressure steam cylinder, and also the exhaust into the upper end of the low pressure steam cylinder.

Intermediate piston No. 3 crosses a port connecting with passage *e*, controlling the exhaust of steam from either end of the low pressure steam cylinder.

Intermediate piston No. 2 crosses a port connecting with passage *g*, causing steam to be admitted to the lower end of the high pressure steam cylinder or exhausting steam from this cylinder into the lower end of the low pressure steam cylinder.

The recent addition of four grooves to the inner end of the large main valve bushing 107 (Fig. 5) serves to prevent possibility of vibration of the main valve when the compressor is operating under a very restricted throttle. Under this condition should the reversing valve fail to supply and maintain steam pressure on the outer face of the large piston equal to that on the inner side, these by-pass grooves serve to equalize the pressure on the large piston before the by-pass grooves in the small piston cylinder balance the pressures at that end. The large piston is thus brought into full balance regardless of the condition of the reversing valve and related parts, thereby preventing rebound of the main valve and resultant vibration.

The piston type reversing valve is a multiple piston device (similar to the main valve) consisting of four pistons of the same size except the upper piston which is slightly smaller (see Fig. 3). A port *z* through the piston valve equalizes the pressures at each end and the

difference in size of the end pistons is such as to compensate for the weight of the reversing valve and rod so that these parts are always in balance.

Chamber B between the two upper pistons is always in communication with the exhaust port *e*. Chamber K, between the two lower pistons is at all times connected to the steam inlet passage *a*. The reversing valve cap serves as a bush for the upper piston and permits removal of the reversing valve.

Relief valves 155 (section B-B) and 156, Fig. 3, which are constructed as shown by the small section at the foot of Fig. 3, are for the purpose of preventing excessive pressure development in the low pressure air cylinder, due to leakage past the high pressure or intermediate discharge valves which might otherwise interfere with normal operation of the compressor.

Old and New Standard Air Compressors

The preceding description applies to the two new standard 8½″ air compressors which are intended for use with steam pressures up to 300 and up to 400 pounds as already stated. The principal difference between the present standard and the former standard compressor (for steam pressures up to 275 pounds) is that the new compressors employ materials suitable for the higher steam pressures and temperatures, and new type top heads. A piston type reversing valve performs the same function as the slide valve type but is subject to less friction, resulting in less strain on the reversing valve rod and insuring better performance. The main valve in the new top head is of one piece construction and the small end piston is the same size as the intermediate

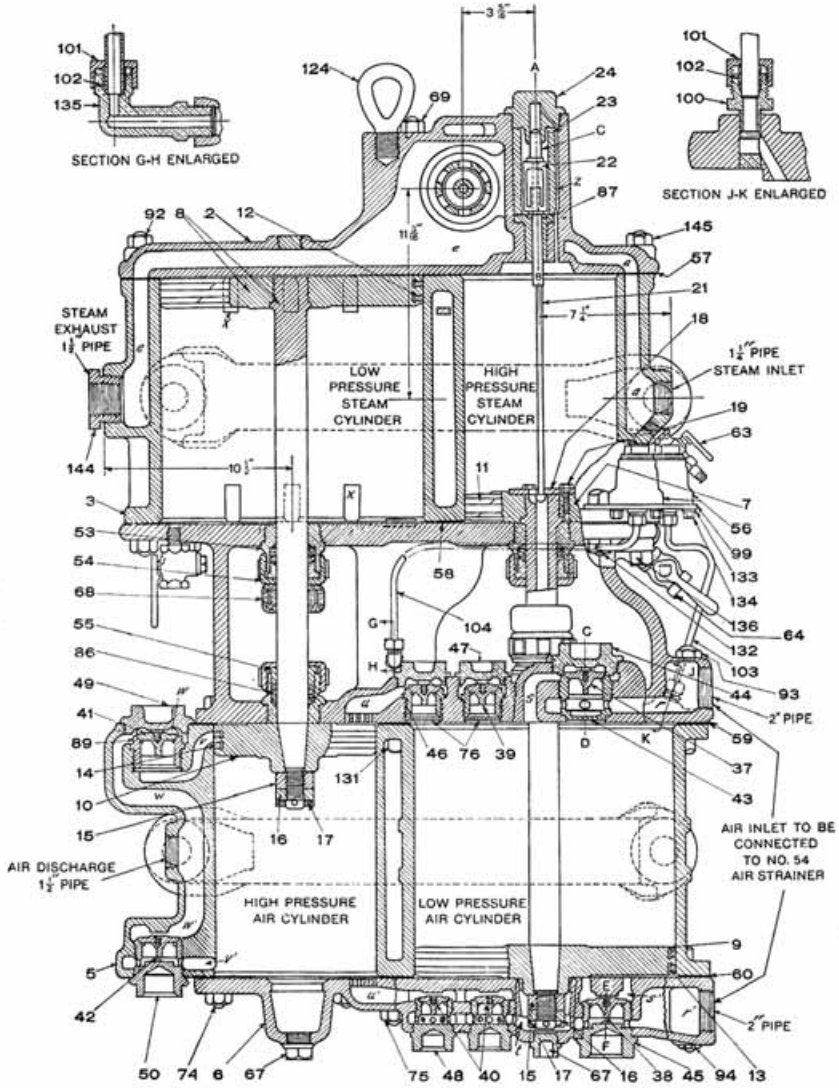

Fig. 6. Sectional Assembly View of the Old Standard 8½″ Air Compressor with Slide Valve Type Reversing Valve

pistons. The use of a bushed cover for the large piston end, and a flat cover for the small piston end makes it possible to apply the main valve without danger of breaking the rings since all rings can be observed.

The diagrammatic views, Plates 1 and 2, represent the new standard compressors but the slide valve reversing valve is shown by small supplementary views, and the section of this pamphlet under "Operation" applies equally to both the old and the new standard compressors.

10½″ CROSS COMPOUND AIR COMPRESSOR

The use of compressed air in the industrial field has been so widely extended that the 10½″ cross compound compressor was developed for this particular service, where ordinarily, steam is not available at the high pressure used in railway braking service, and the air pressures used are not so high.

The 10½″ compressor operates on the relatively low steam pressure of 100 pounds, with a normal displacement of 150 cubic feet of air at 80 pounds pressure. The air cylinders are not water jacketed and no intercooler is required. In all essential details this compressor follows the same general design as that of the 8½″ compressor previously described.

General data covering the principal dimensions, weight, etc., of the 10½″ compressor is given on page 32.

General Instructions for the installation and care of 10½″ compressors in *industrial service* are covered by Descriptive Leaflet No. 2341.

OPERATION of C. C. Air Compressors

See Diagrammatic Views, Plates 1 and 2

When the high pressure steam piston 7 has nearly completed its up stroke, the reversing valve plate 18 comes in contact with the shoulder on the reversing rod 21, forcing this rod to its uppermost position, carrying with it reversing valve 22, the movement of which, in turn, not only blanks passage *m*, thereby cutting off means of exhausting steam from chamber N on the face of the large piston, but also opens passage *n*, filling this chamber with live steam from steam inlet passage *a*. The pressure thus exerted on the face of the large piston added to the pressure on the inner side of the small piston 1, is now greater than the pressure exerted against the inner side of the large piston, and the main valve moves toward the left, or in the direction of chamber *E*.

The small end piston cylinder bush is provided with elongated grooves. These grooves have been considered for the sake of simplicity as combined into one groove, *p*. As the piston valve moves toward the left and uncovers these grooves, live steam from chamber *A* by-passes to chamber *E* back of the small end piston. At the instant these grooves are cut off by the further movement of the piston, port *o* leading to the exhaust is also blanked which enables the small piston to compress the steam in chamber E, thus providing a high cushioning pressure. This movement of the main valve admits steam, through passage c, to the upper end of the high pressure steam cylinder, starting the high pressure steam piston on its

downward stroke. All parts have now assumed the position shown in Plate 1.

A direct communication is now established whereby live steam is supplied through passage *a*, chamber *A'*, and passage *c* to the upper end of the high pressure steam cylinder, forcing downward the high pressure steam piston 7 and low pressure air piston 9, which are rigidly connected by a piston rod. The movement of the piston valve to the left, as described above, has opened passage *g* to passage *f* through chamber F, thus permitting the steam in the lower end of the high pressure steam cylinder to expand into the lower end of the low pressure steam cylinder under piston 8. The latter cylinder being of materially larger volume than the former, it will be seen that the steam is thereby made to do its work expansively in the low pressure steam cylinder. At the same time—

(a) the low pressure air piston 9 is compressing air in the lower end of the low pressure air cylinder and forcing same through the intermediate valves 40 and passage *u'* into the lower end of the high pressure air cylinder under piston 10, and—

(b) air at atmospheric pressure is being drawn into the upper end of the low pressure cylinder, through the air strainer, upper inlet opening, and past inlet valve 37.

It will be observed that the steam exhausted into the lower end of the low pressure steam cylinder and the low pressure air forced into the lower end of the high pressure air cylinder act simultaneously on the lower sides of their respective pistons. The force thus exerted results in an upward movement of the low pressure steam